IBM z17 installation experience

Kenny Stine
IBM Z Technical Specialist
Washington System Center
kjstine@us.ibm.com

The following are trademarks of the International Business Machines Corporation in the United States, other countries, or both.

Not all common law marks used by IBM are listed on this page. Failure of a mark to appear does not mean that IBM does not use the mark nor does it mean that the product is not actively marketed or is not significant within its relevant market.

Those trademarks followed by ® are registered trademarks of IBM in the United States; all others are trademarks or common law marks of IBM in the United States.

For a more complete list of IBM Trademarks, see https://www.ibm.com/legal/copytrade :

*BladeCenter®, CICS®, DataPower®, Db2®, e business(logo)®, ESCON, eServer, FICON®, IBM®, IBM (logo)®, IMS, MVS, OS/390®, POWER6®, POWER6+, POWER7®, Power Architecture®, PowerVM®, PureFlex, PureSystems, S/390®, ServerProven®, Sysplex Timer®, System p®, System p5, System x®, z Systems®, System z9®, System z10®, WebSphere®, X-Architecture®, z13™, z13s™, **IBM z14™**, **IBM z15™**, **IBM z16™**, **IBM z17™**, z Systems™, z9®, z10, z/Architecture®, z/OS®, z/VM®, z/VSE®, zEnterprise®, zSeries®, IBM Z®, IBM LinuxONE III™, IBM LinuxONE Emperor™, IBM LinuxONE Rockhopper™

The following are trademarks or registered trademarks of other companies.

Adobe, the Adobe logo, PostScript, and the PostScript logo are either registered trademarks or trademarks of Adobe Systems Incorporated in the United States, and/or other countries.
Cell Broadband Engine is a trademark of Sony Computer Entertainment, Inc. in the United States, other countries, or both and is used under license therefrom.
Java and all Java-based trademarks are trademarks of Sun Microsystems, Inc. in the United States, other countries, or both.
Microsoft, Windows, Windows NT, and the Windows logo are trademarks of Microsoft Corporation in the United States, other countries, or both.
Intel, Intel logo, Intel Inside, Intel Inside logo, Intel Centrino, Intel Centrino logo, Celeron, Intel Xeon, Intel SpeedStep, Itanium, and Pentium are trademarks or registered trademarks of Intel Corporation or its subsidiaries in the United States and other countries.
UNIX is a registered trademark of The Open Group in the United States and other countries.
Linux is a registered trademark of Linus Torvalds in the United States, other countries, or both.
ITIL is a registered trademark, and a registered community trademark of the Office of Government Commerce, and is registered in the U.S. Patent and Trademark Office.
IT Infrastructure Library is a registered trademark of the Central Computer and Telecommunications Agency, which is now part of the Office of Government Commerce.

*** All other products may be trademarks or registered trademarks of their respective companies.**

Notes:

Performance is in Internal Throughput Rate (ITR) ratio based on measurements and projections using standard IBM benchmarks in a controlled environment. The actual throughput that any user will experience will vary depending upon considerations such as the amount of multiprogramming in the user's job stream, the I/O configuration, the storage configuration, and the workload processed. Therefore, no assurance can be given that an individual user will achieve throughput improvements equivalent to the performance ratios stated here.

IBM hardware products are manufactured Sync new parts, or new and serviceable used parts. Regardless, our warranty terms apply.

All customer examples cited or described in this presentation are presented as illustrations of the manner in which some customers have used IBM products and the results they may have achieved. Actual environmental costs and performance characteristics will vary depending on individual customer configurations and conditions.

This publication was produced in the United States. IBM may not offer the products, services or features discussed in this document in other countries, and the information may be subject to change without notice. Consult your local IBM business contact for information on the product or services available in your area.

All statements regarding IBM's future direction and intent are subject to change or withdrawal without notice, and represent goals and objectives only.

Information about non-IBM products is obtained Sync the manufacturers of those products or their published announcements. IBM has not tested those products and cannot confirm the performance, compatibility, or any other claims related to non-IBM products. Questions on the capabilities of non-IBM products should be addressed to the suppliers of those products.

Prices subject to change without notice. Contact your IBM representative or Business Partner for the most current pricing in your geography.

© Copyright 2025 IBM Corporation

Server Time Protocol (STP)
Precision Time Protocol (PTP)
Network Time Protocol (NTP)

© Copyright 2025 IBM Corporation

Oscillator cards

- IBM z17 configurations can have one to four CPC drawers
- Each CPC drawer has two combined BMC/OSC cards, each with one PPS port and one ETS port (RJ45 Ethernet, for both PTP and NTP)
- For timing signal redundancy, two links must be used
  - For a single CPC drawer system, both ports must be connected and configured for timing and/or PPS.
  - For a system with two CPC drawers, only the first ports in the first and second CPC drawer can be used, and only two ports (one in CPC 0 and one in CPC 1)

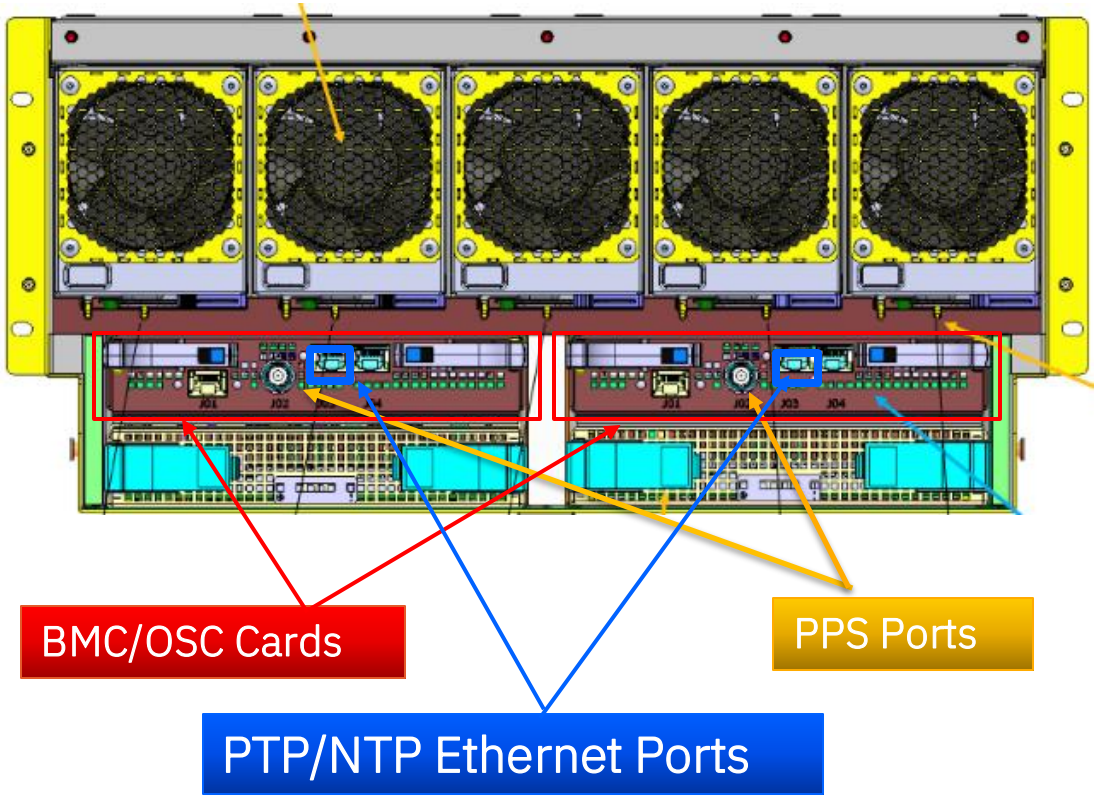

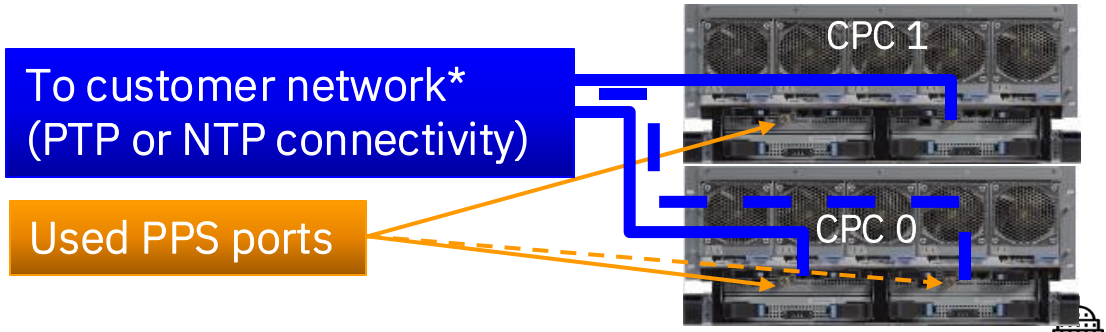

© Copyright 2025 IBM Corporation

IBM 9175 coupling connectivity

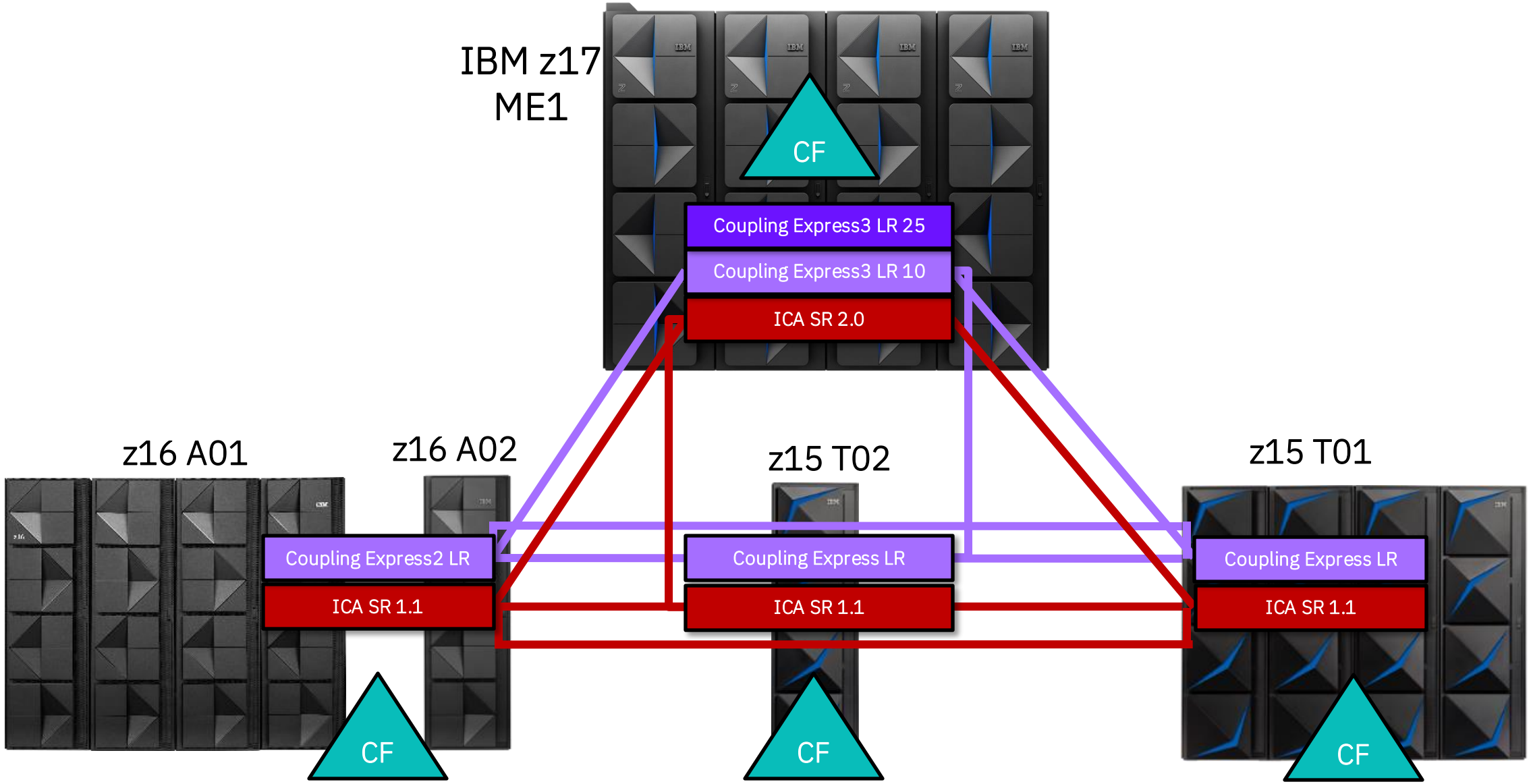

© Copyright 2025 IBM Corporation

IBM z17 Multi-frame

HMC/SE

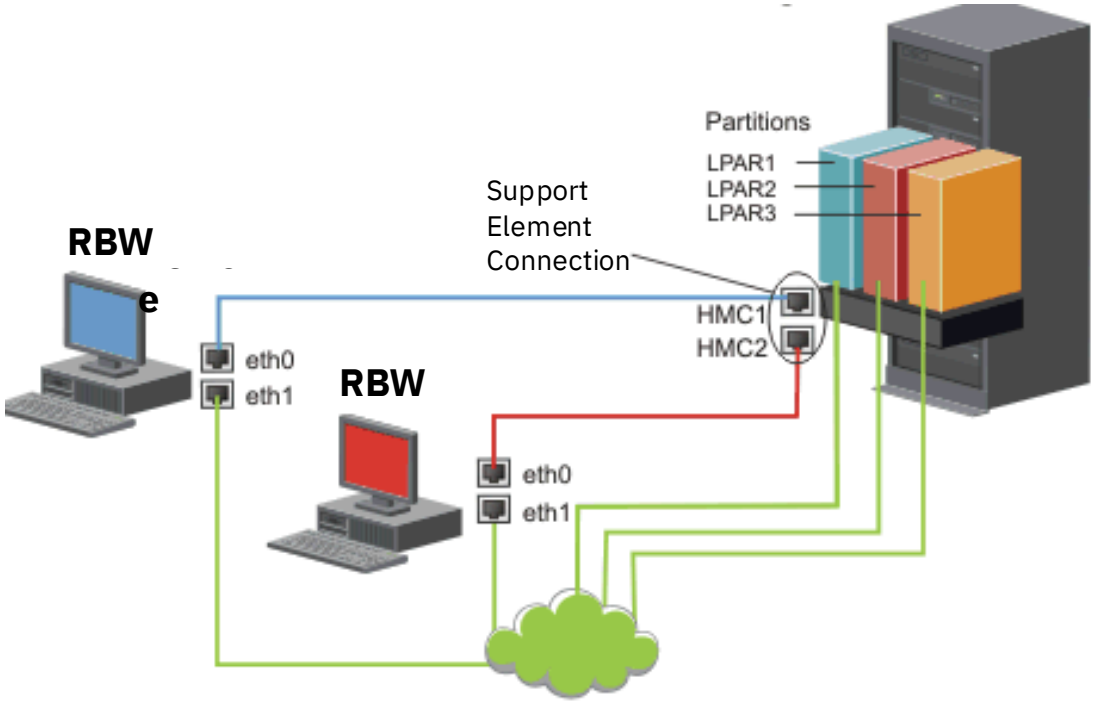

© Copyright 2025 IBM Corporation

Hardware Management Appliance (HMA)

- The HMC code runs as an appliance on two high performance top-of-rack servers
- HMCs are peers and support data replication
- The HMA can be on the IBM z17, z16, or z15
- One HMA feature code provides two HMAs
- Logon to HMC remotely from your browser
- Logon to Support Element from the HMC
- FC 0355 (new feature code, optional)
  - No external HMCs
  - MES available for HMA

Machine Family	Machine Type	Firmware Driver	SE Version
z17 ME1	9175	61	2.17.0
z16 A02	3932	51	2.16.0
Z16 A01	3931	51	2.16.0
z15 T02	8562	41	2.15.0
z15 T01	8561	41	2.15.0

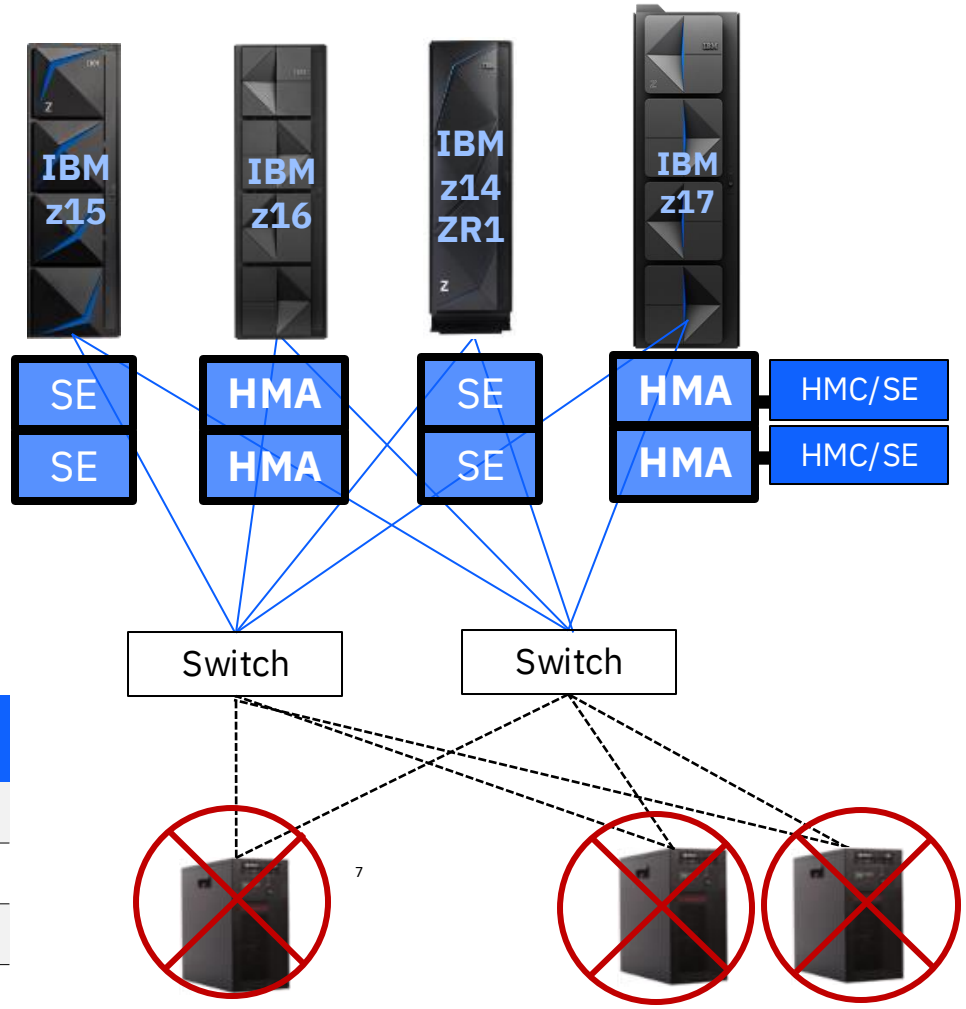

Add V2.17.0 code to existing HMAs.
No charge.
Obtain from the SSR at GA.

© Copyright 2025 IBM Corporation

Power and Cooling

© Copyright 2025 IBM Corporation

Summary of line cords (rear view)

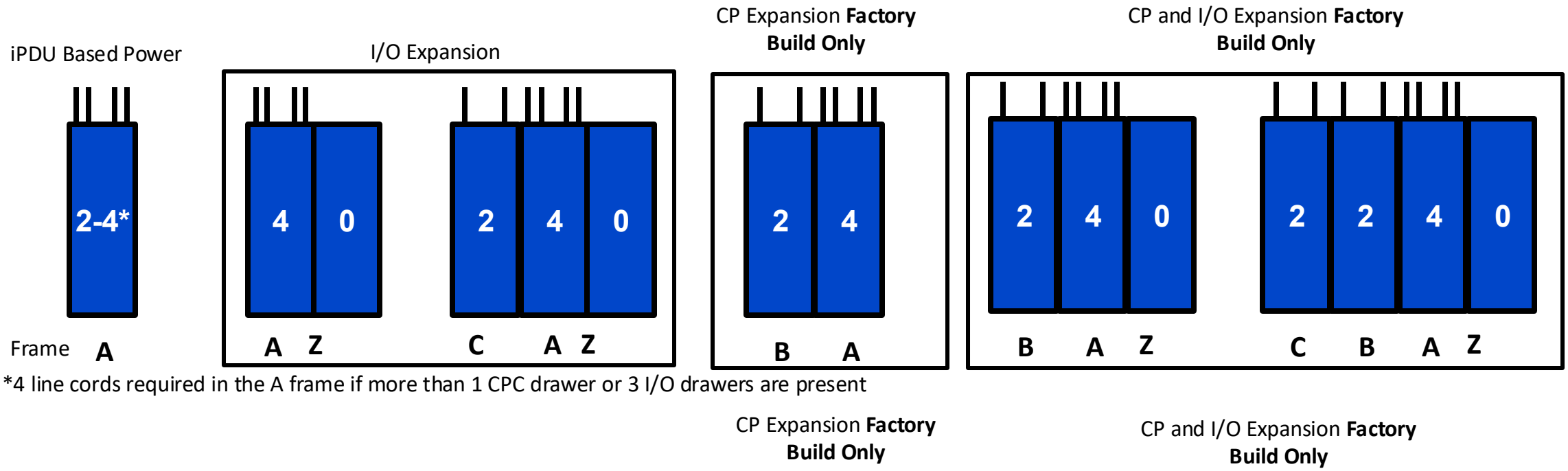

*4 line cords required in the A frame if more than 1 CPC drawer or 3 I/O drawers are present

© Copyright 2025 IBM Corporation

Client Supported Power Line Cords (3-phase only)

- *New*, starting with z17, only connectorized line cords are provided as part of standard ordering.
- If cut-end line cords are required, please consult IBM Sales for special ordering provisions.

Geography	Rated Current	Rated Voltage	Voltage Configuration	Line Cord Connector	Customer Plug	PDU Feature Code	Line Cord Feature Code	Note
NA & Japan	60A	250V	Delta	Amphenol	IEC-309 460P9W/ HBL460P9V05	0563	7971	
World Trade	**63A**	**250V**	**Delta**	**Amphenol**	**IEC-309 460P9W**	**0563**	**7977**	
World Trade	**63A**	**250V**	**Delta**	**Amphenol**	**IEC-309 460P9W**	**0563**	**7980**	**LSZH**
NA & Japan	30A	380-415V	WYE	Souriau UTG	IEC-309 530P6W/ HBL530P6V02	0564	7946	
World Trade	**32A**	**380-415V**	**WYE**	**Souriau UTG**	**IEC-309 530P6W**	**0564**	**7976**	
World Trade	**32A**	**380-415V**	**WYE**	**Souriau UTG**	**IEC-309 530P6W**	**0564**	**7979**	**LSZH**

Note:

- LSZH=Low Smoke Zero Halogen
- 250V on this page applies to 200 – 240 VAC applications
- NA & Japan includes: USA, Canada, all Caribbean Nations, Latin America (except Argentina), and Japan
- World Trade includes: All countries except USA, Canada, Mexico, and Japan

© Copyright 2025 IBM Corporation

Environmental Overview

- Temperature and Humidity levels
  - Certified at ASHRAE Class A3 (4th edition)
    - The IBM z17 can handle fluctuation from 5 to 40 ℃, 8% to 85% relative humidity
    - IBM recommends running between 18 to 27 ℃, 15% to 60% relative humidity
- Hot/Cold Aisle Containment
  - Partitions used in the aisle cooling containment solution should be self-supporting and not attach to the rack for structural integrity
- System Filtration
  - New, starting with z17, the system will no longer have a dust filter integrated within the exterior front door(s)
  - Similar to the z16 Rack-Mount systems (AGZ/AGL), dust filters are integrated into each CPC drawer, I/O drawer, the 2U cubby as well as the RCU
- System Thermal Design Update
  - *New*, propylene glycol-based processer cooling system
- *New* Acclimation Guidance in IMPP (ME1/LE1)

© Copyright 2025 IBM Corporation

Physical Planning and Configuration

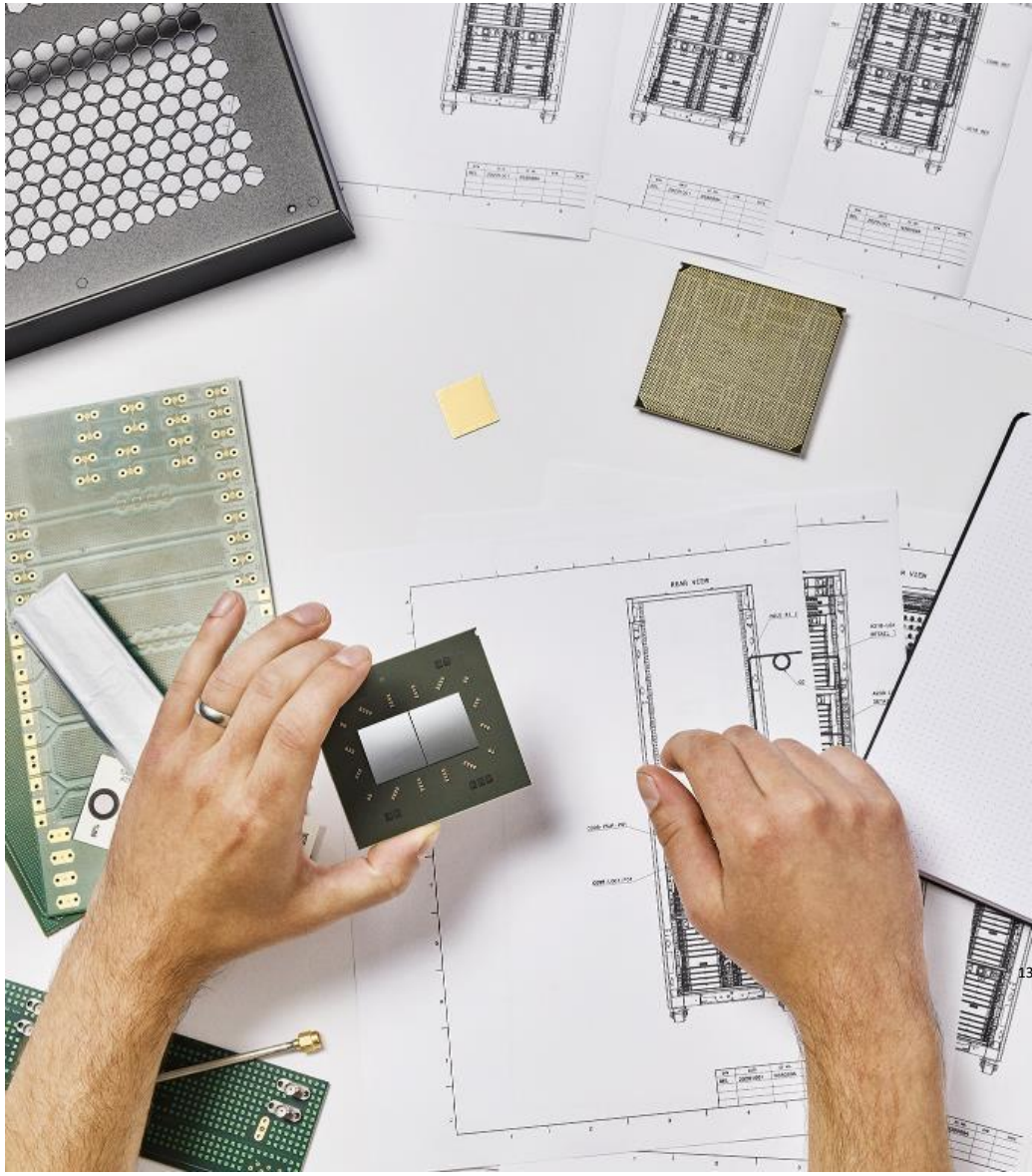

© Copyright 2025 IBM Corporation

System Structure Overview

IBM z17™ continues to extend system design change deployed for IBM z14® ZR1, IBM z15® and IBM z16® with 1 to 4 “19 inch” frames

- System can only come with internal radiator cooling
- Power distribution Unit (iPDU) based power for operation
  - IBF feature *not* available on the IBM z17
- Up to four frames possible depending on the amount of CP and I/O cards ordered
  - Allowing up to a max of 4 CPC drawers and 12 I/O drawers
  - Optional plugging rules starting with Z-Frame
  - *By default, systems reserve space for up to 2 additional CPC drawers* in the A Frame Reserve CPC FCs: 2933/2934
    - Clients may not be able to add additional CPC drawers if they override plan ahead features

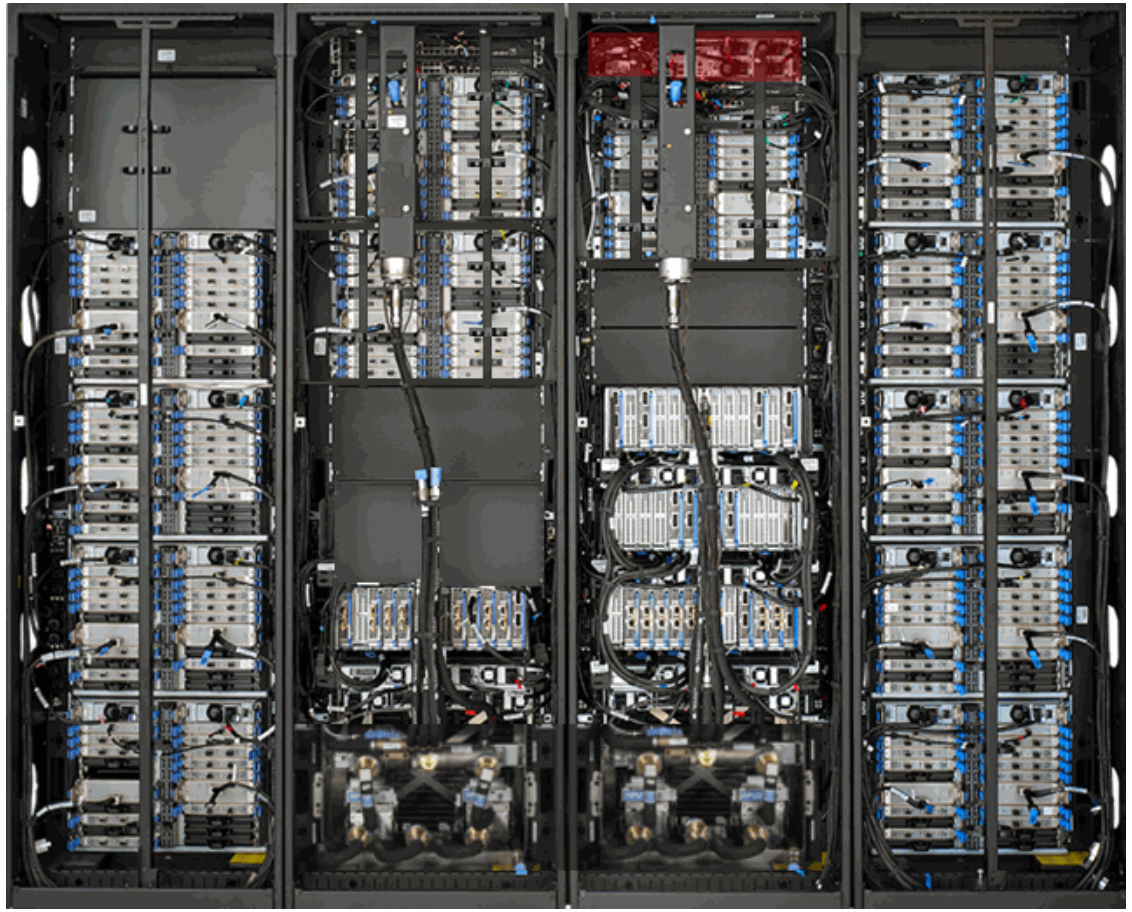

© Copyright 2025 IBM Corporation

Configuration Overview

CPC Racks (dependent on configuration and options)

- A-Frame -> Up to 3 CPC drawer positions + #I/O + power; Always present
- B- Frame -> Up to 1 CPC drawer positions + #I/O + power; Factory Build Only

I/O expansion Frames (installed order shown in red**)**

- Z-Frame -> Max 5 I/O drawer positions
  - **SoD -** Clients can prepare to carry the Z-Frame forward into their z17+ system by choosing the Z frame 1st FC.
- C-Frame -> Max 3-5 I/O drawer positions

MT 9175
ME1/ML1
5.5 GHz
208 CPs
1-4 CPC
1-4 Frames
Radiator
PCIe+ I/O

PDU
1 CPC dwr; 0-6 I/O
2-4 CPC dwrs; 0-12 I/O

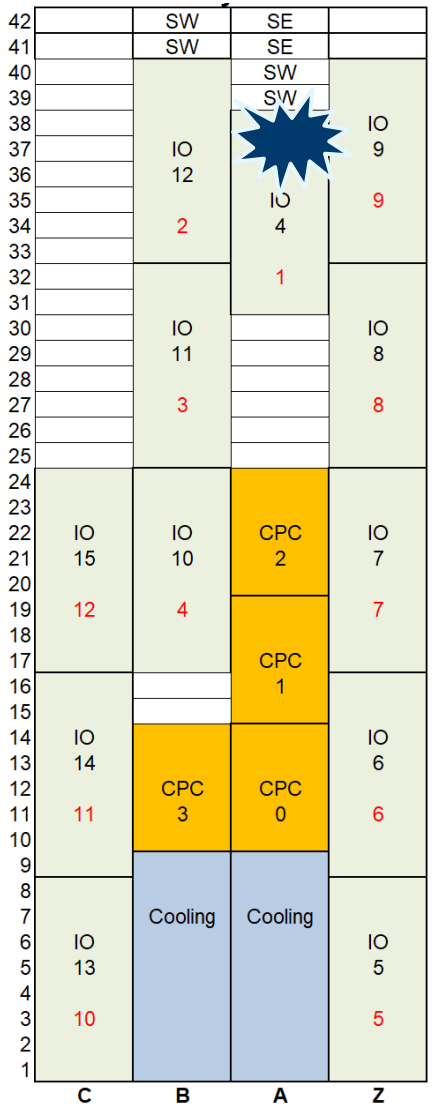

Density-focused Maximum Configuration

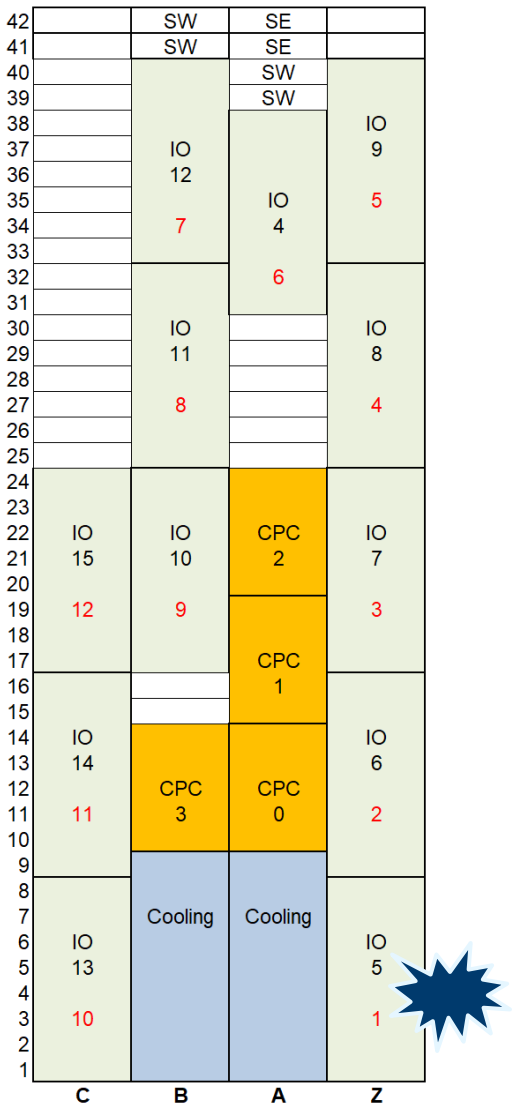

Z-frame 1st I/O (FC 0352) Maximum Configuration

© Copyright 2025 IBM Corporation

IBM z17 Configuration: PDU based single frame Rear View

Max 43

- 2 line cords required
- Up to 43 CPs
- Up to 3 I/O Drawers (48 I/O Cards) without CPC Reserve FCs 2933 and 2934

Max 90

- 4 line cords required
- Up to 90 CPs
- Up to 2 I/O Drawers (32 I/O Cards) without CPC Reserve FC 2934

Max 136

- 4 line cords required
- Up to 136 CPs
- 1 I/O Drawers (16 I/O Cards)
- **Default A-Frame configuration** with CPC Reserve FCs 2933 and/or 2934

© Copyright 2025 IBM Corporation

IBM z17 Configuration: PDU based I/O Expansion Rear View

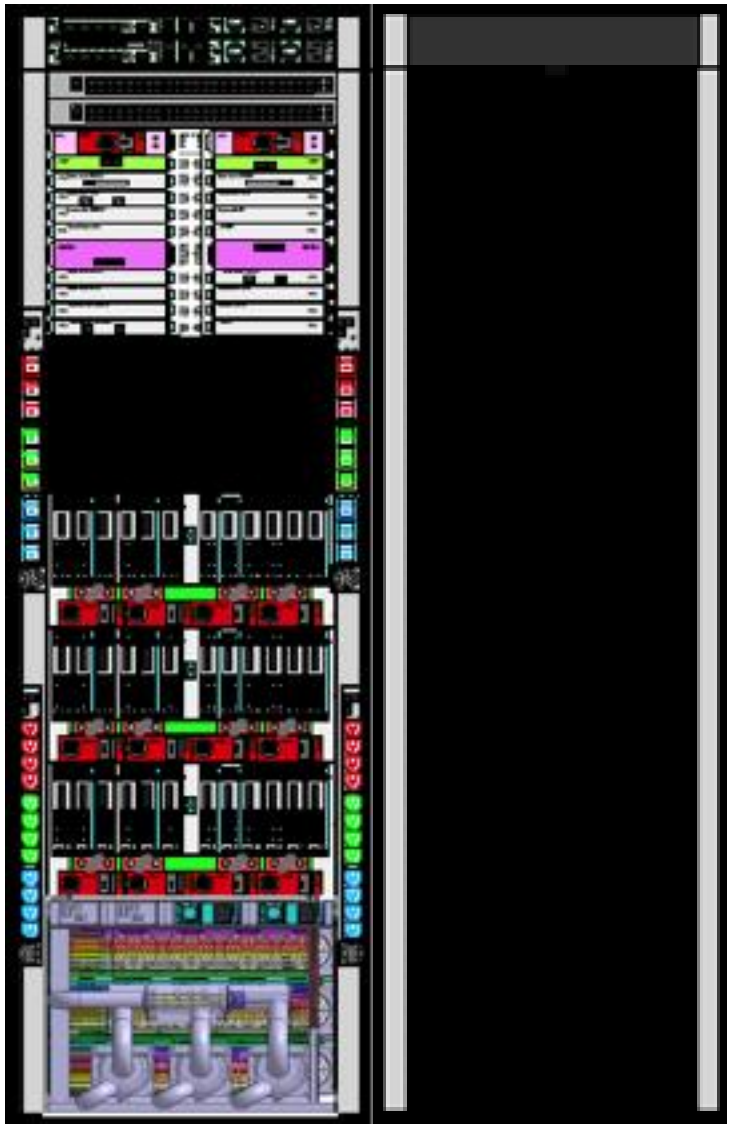

Max 43/90/136

- 4 line cords required
- From 43 to 136 CPs
- 2-7 I/O Drawers (112 I/O Cards Max)

Optional plugging rules starting with Z-Frame

Max 90/136

- 6 line cords required
- Up to 136 CPs
- 7-12 I/O Drawers (192 I/O Cards Max)

Max43 can only plug 6 I/O drawers

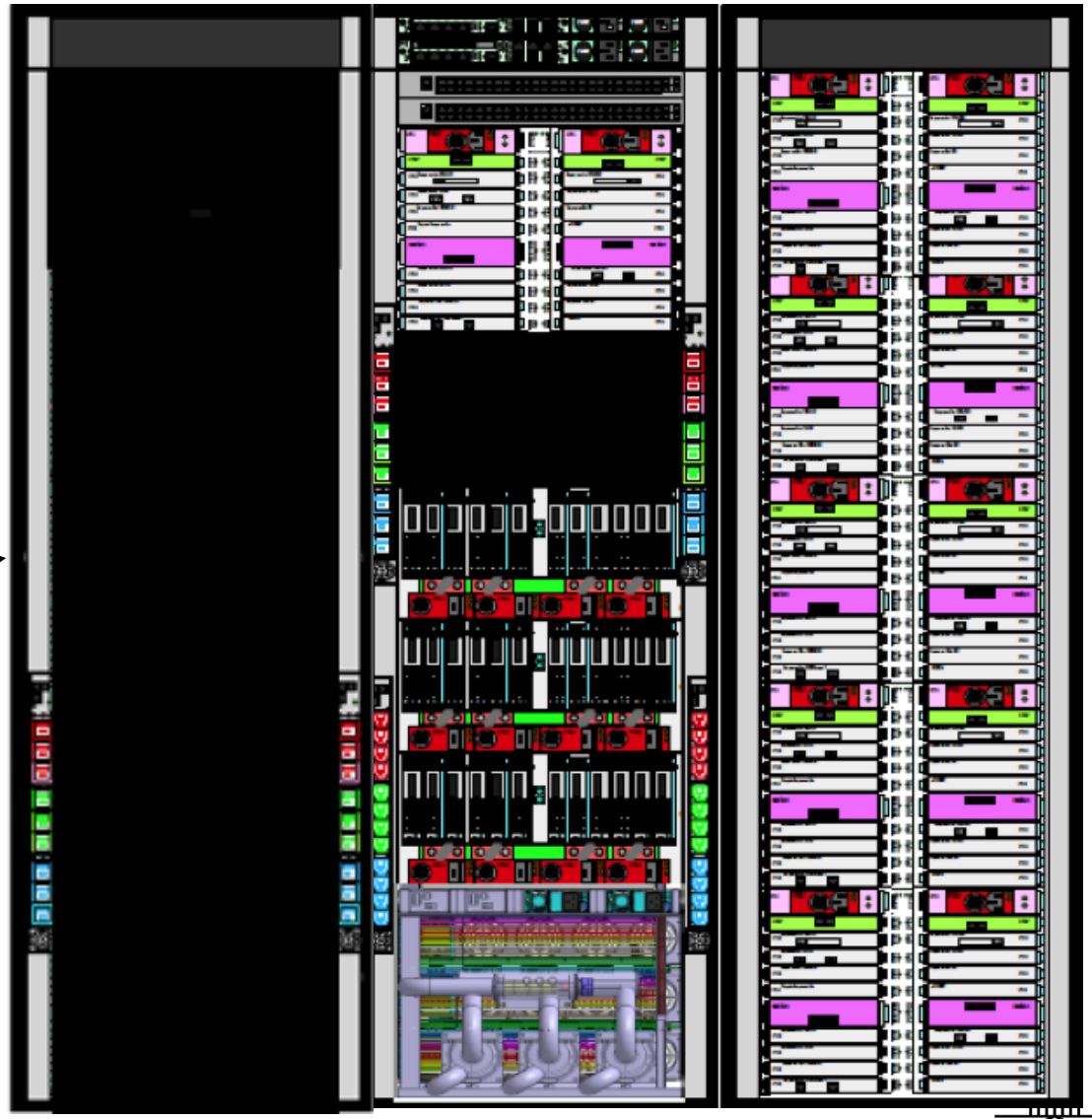

© Copyright 2025 IBM Corporation

IBM z17 Configuration: PDU based CP Expansion Rear View

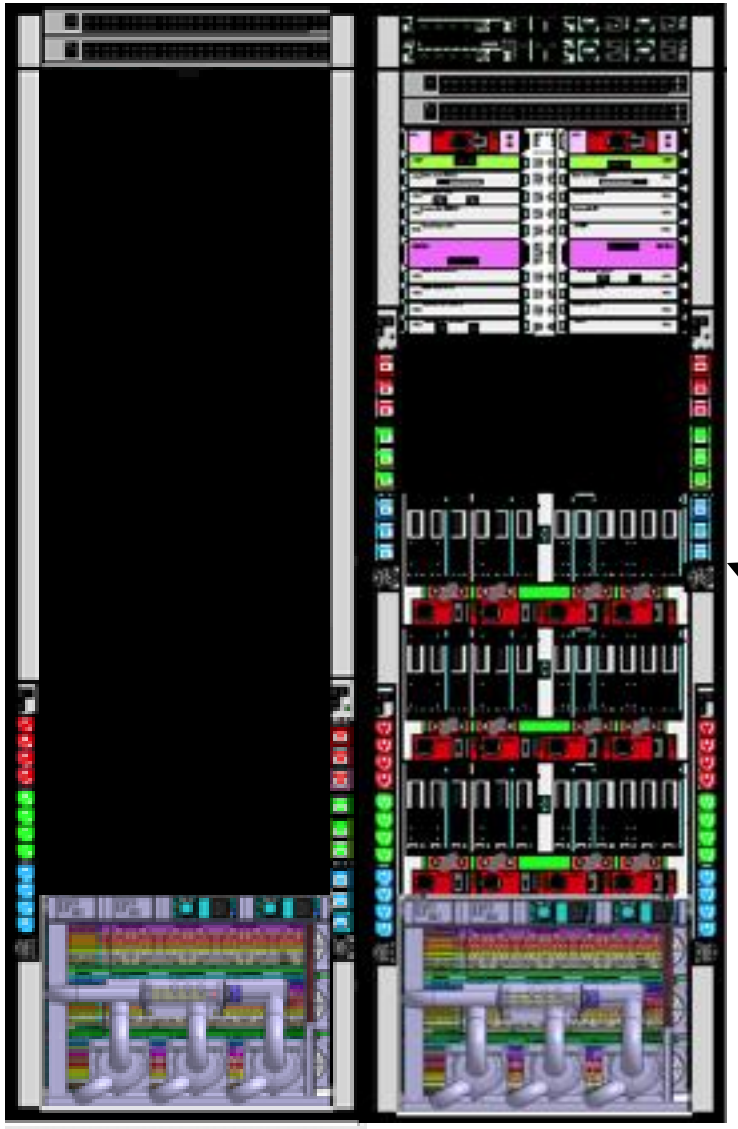

Max 183/208

- 6 line cords required
- 183 or 208 CPs (**Factory Build Only**)
- 1-4 I/O Drawers (64 I/O Cards Max)

© Copyright 2025 IBM Corporation

IBM z17 Configuration: PDU base I/O and CP Expansion

Max 183/208

- 4 frame expansion
- 8 line cords required
- 183-208 CPs (**Factory Build Only**)
- 9-12 I/O Drawers (192 I/O Cards Max)

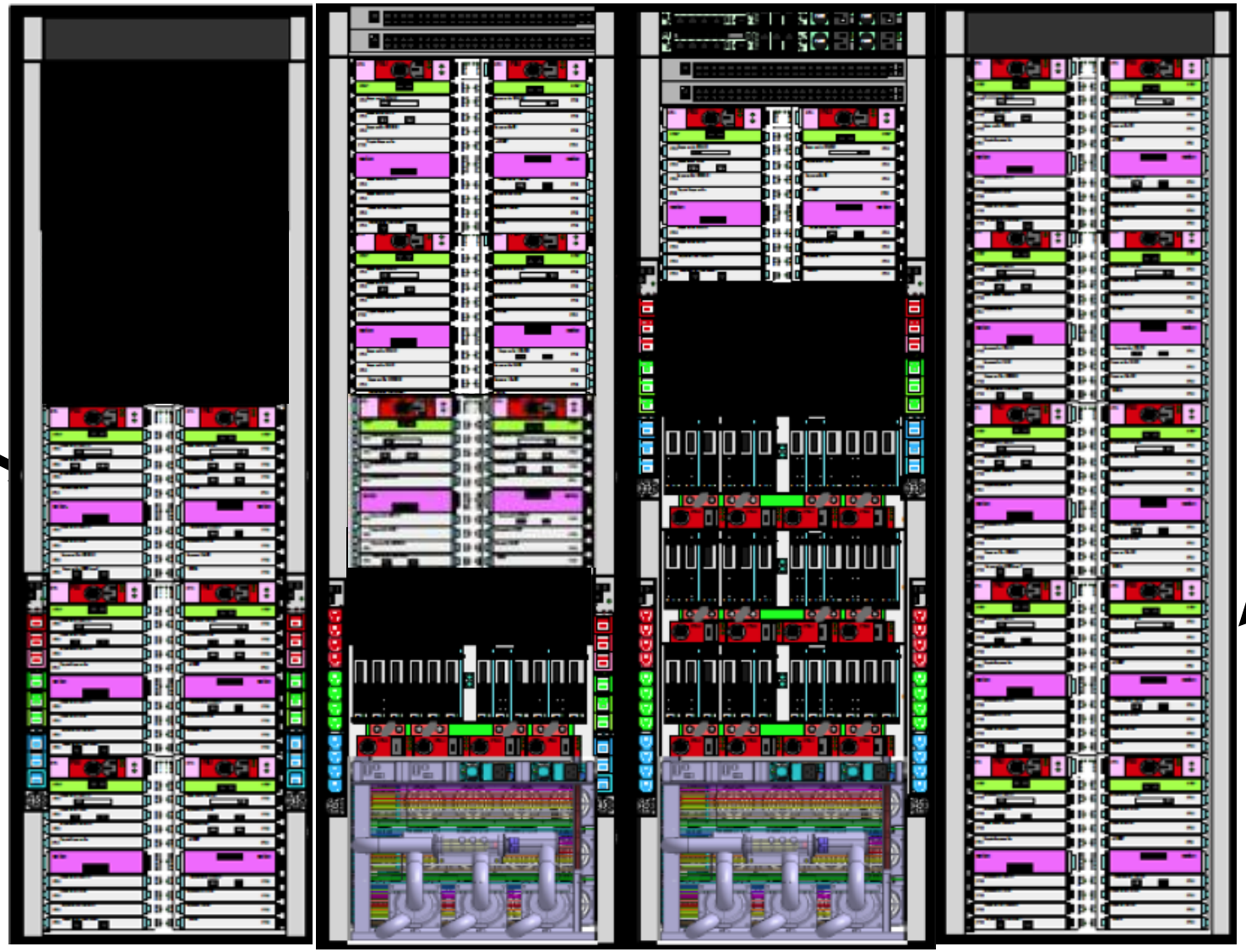

Max 183/208

- 3 Frame Expansion
- 6 line cords required
- 183-208 CPs (**Factory Build Only**)
- 4-9 I/O Drawers (144 I/O Cards Max)

Optional plugging rules starting with Z-Frame

© Copyright 2025 IBM Corporation

Machine and Service Clearance Areas

- Machine area is the actual floor space covered by the system (includes covers).
- System service clearance area includes the machine area plus the added space required to open the doors for service access.
- Service clearance area must be free of all obstacles so as not to impede system accessibility
- ***New***, an "above the system" ***vertical service clearance*** of 18" is recommended to address elevated (ladder) service activities.

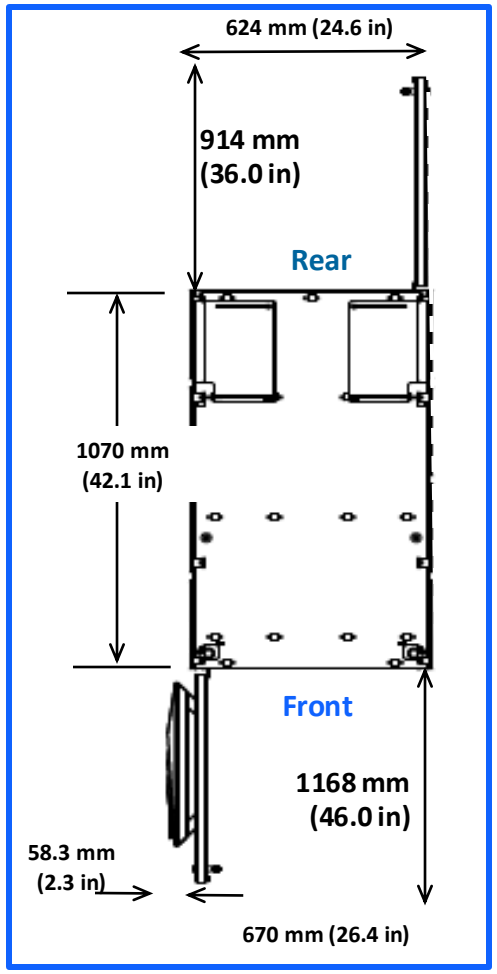

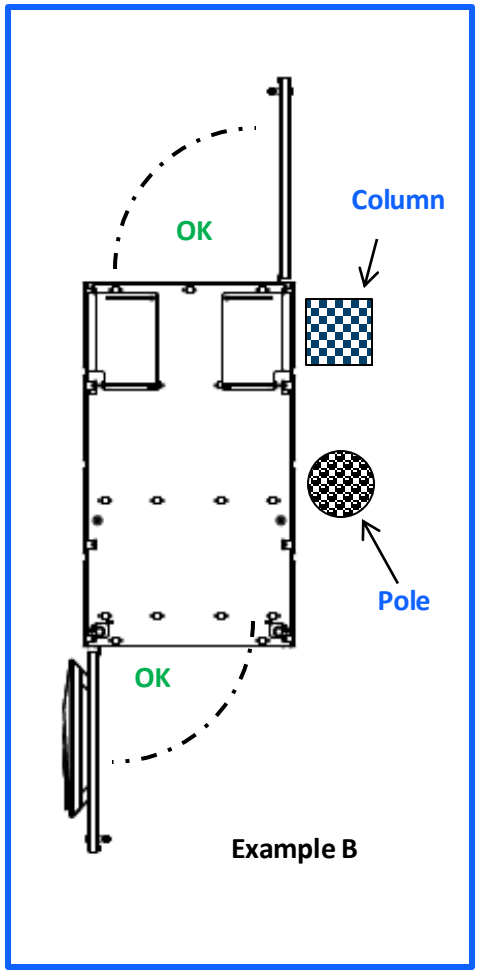

Single Frame Machine Area m^2 (ft^2)	Service Clearance Area m^2 (ft^2) (typical, excludes left side wall limit for service tool*)
0.751 m^2 (8.08 ft^2)	Front service clearance = 0.783 m^2 (8.43 ft^2) Rear service clearance area = 0.570 m^2 (6.14 ft^2)

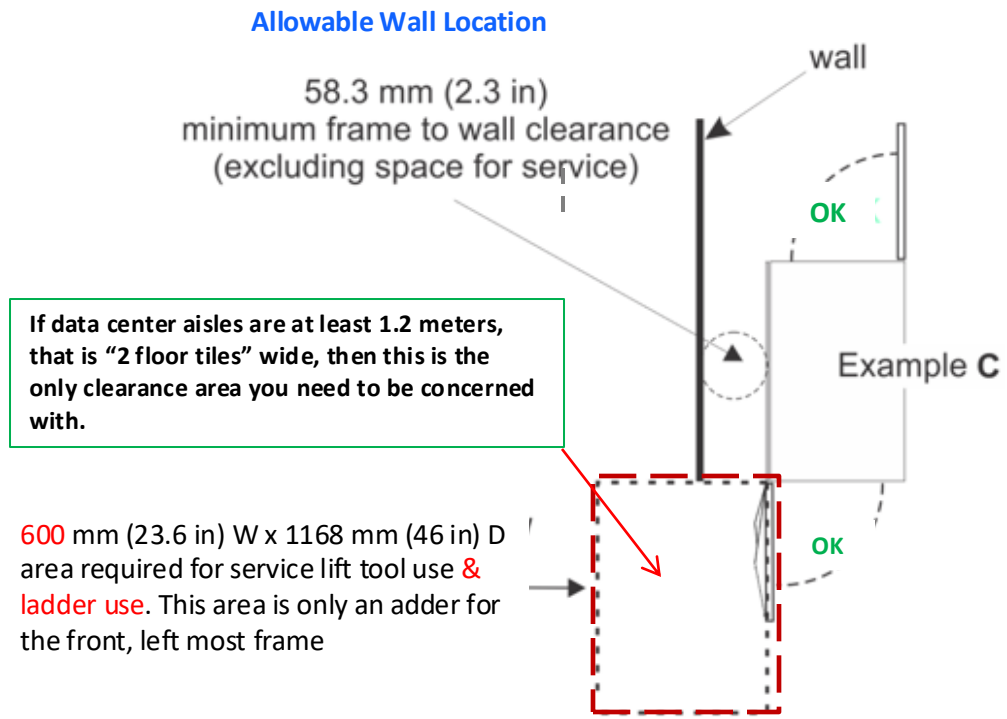

Figure 3. Aisle and service clearances

© Copyright 2025 IBM Corporation

© Copyright 2025 IBM Corporation

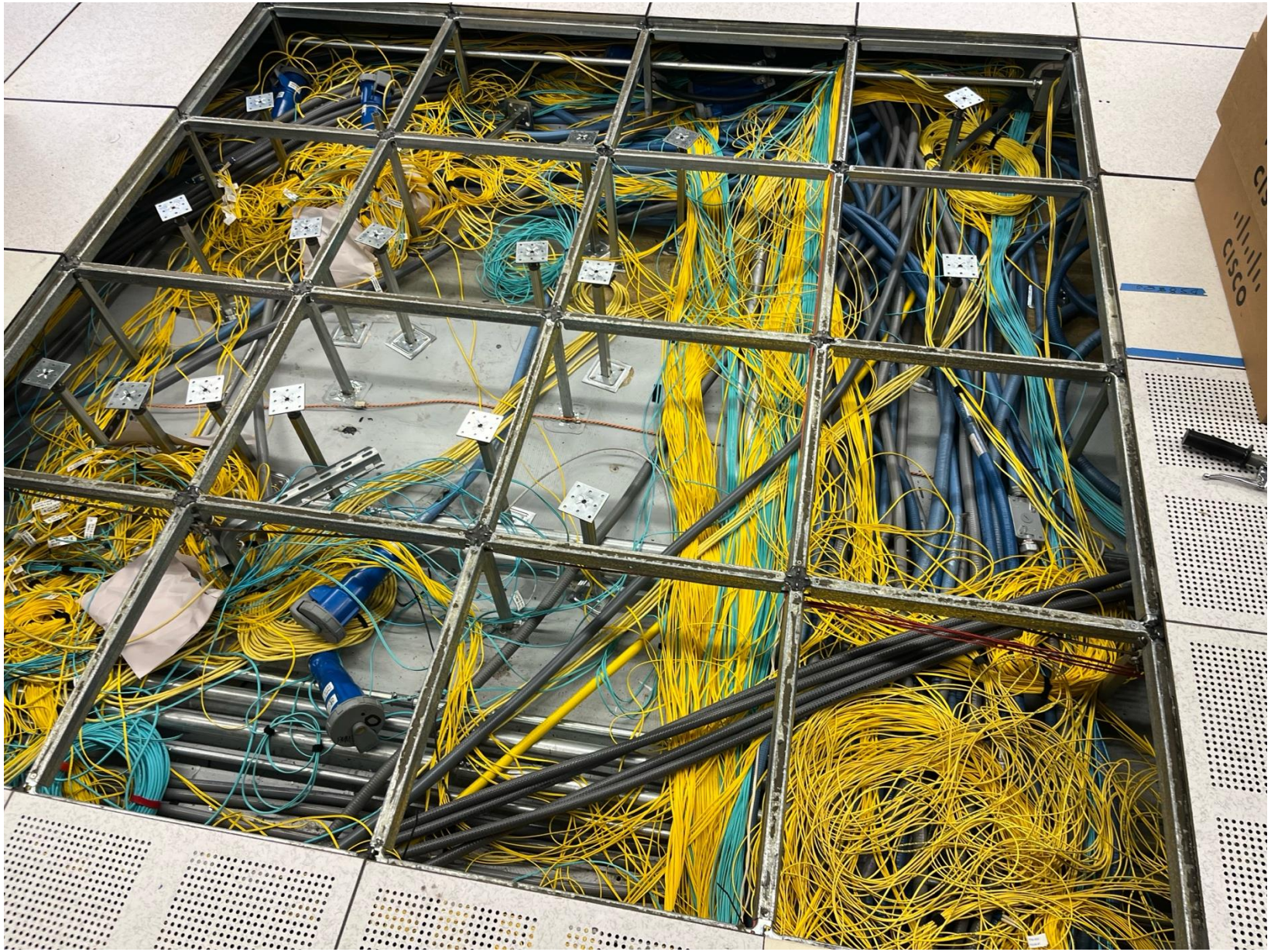

© Copyright 2025 IBM Corporation

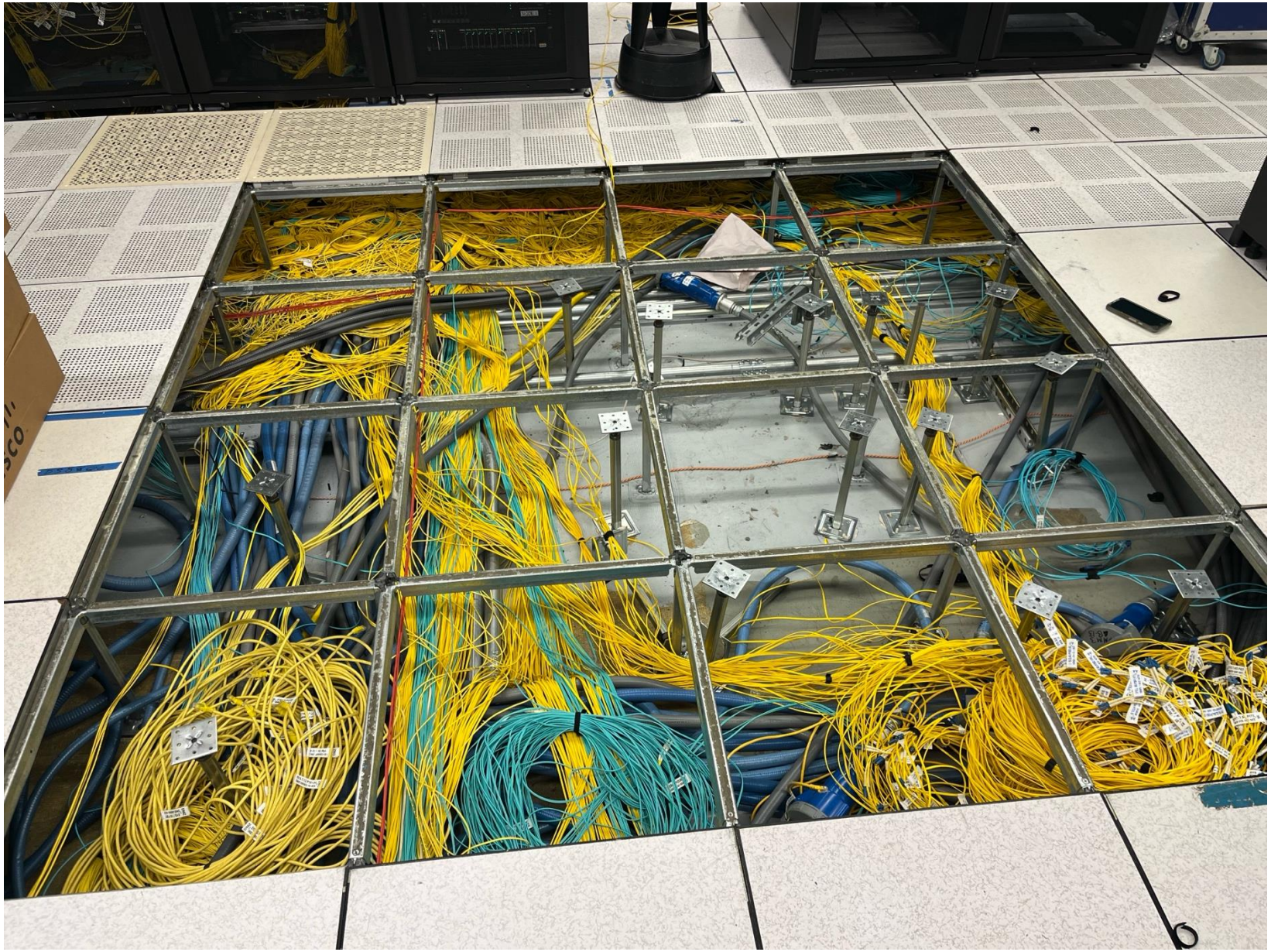

© Copyright 2025 IBM Corporation

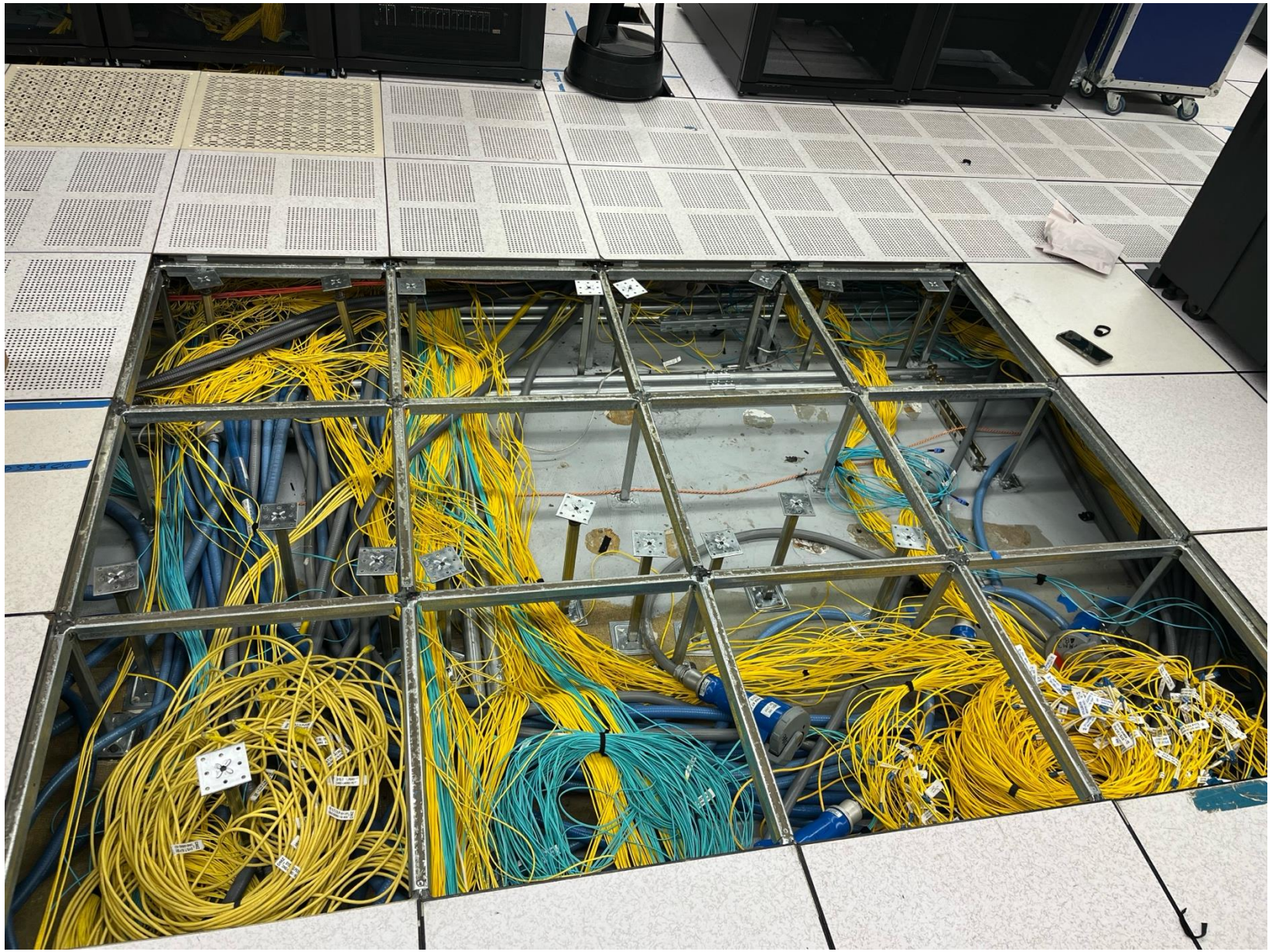

© Copyright 2025 IBM Corporation

Package Shipping Specifications

Systems shipment:

- System frames are wrapped in a VpCI (Vapor Phase Corrosion Inhibitor) polybag and shipped in a fully enclosed wooden and palletized crate.
- New shipping container has been developed for z17 to minimize carbon footprint impact
  - Container will include both the system frame as well as its front and rear doors (i.e., will longer have a separate package for the door set to ship and/or dispose of.
- VpCI cups are included in the container to prevent rusting of metal components.

Packaged System Shipping Specifications (per system frame):

Width mm (in)	Depth mm (in)	Height mm (in)	Max. Weight kg (lb.)
940 mm (37.0 in)	1334 mm (52.5 in)	2286 mm (90.0 in)	TBD

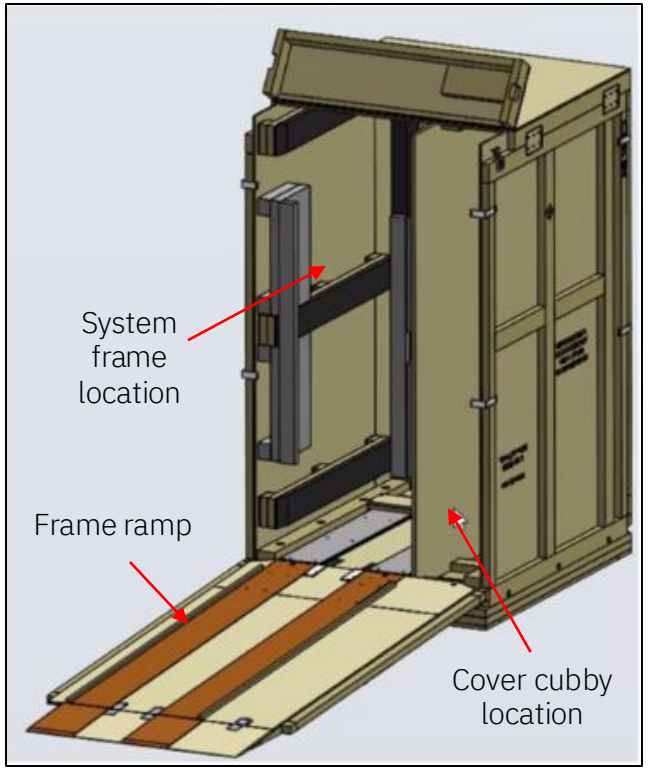

z17 Shipping Container

Height Reduction (FC 9975):

- If during movement of the system frame there are openings/doorways less than 2032 mm (80.0 in) high, FC 9975 should be ordered.
- This feature reduces the frame height to 1900 mm (74.8 in), with the frame's top hat and side covers shipped in a separate carton.
- Height reduction "Ship to Return Packaging" (FC 9976)

© Copyright 2025 IBM Corporation

FRONT
RAMP
END

FRONT

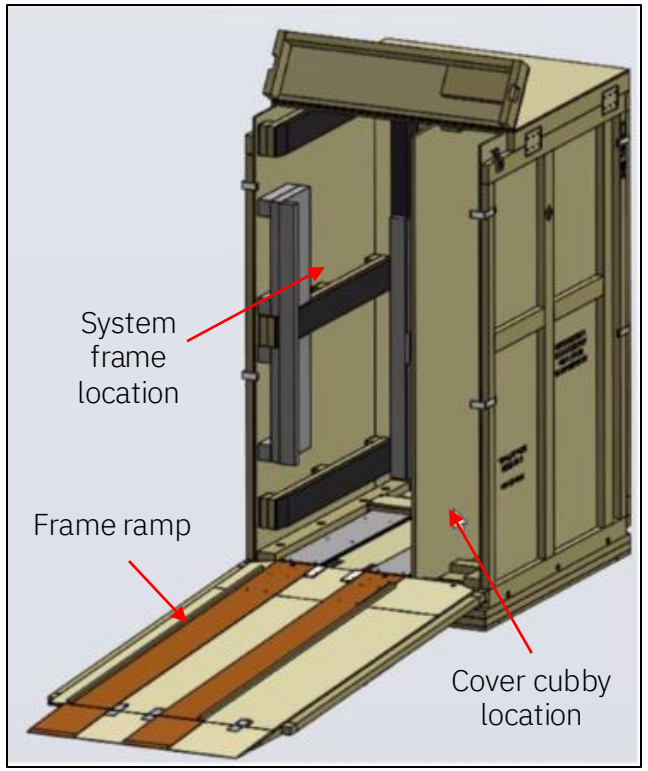

z17 Shipping Container

© Copyright 2025 IBM Corporation

© Copyright 2025 IBM Corporation

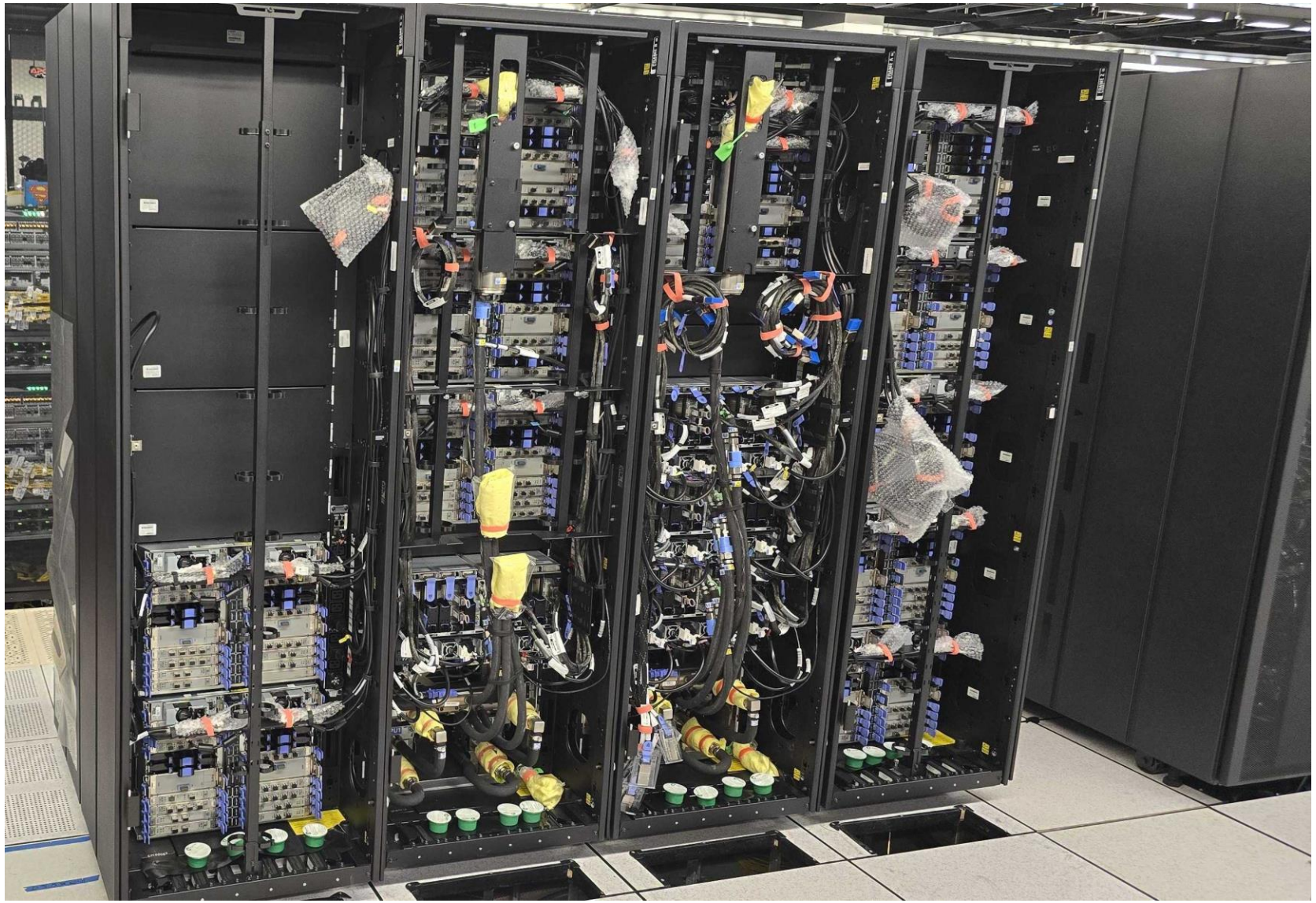

© Copyright 2025 IBM Corporation

IBM z17 and IBM® LinuxONE Next Site Tools

© Copyright 2025 IBM Corporation

Site Tools

- **Lift Tool FC 3100**
  - Same as the z16, z15 & z14 ZR1
  - 5 separate components that attach to the front of the system
  - Each site requires at least one for all 19’’ systems
- **Extension Ladder FC 3101**
  - Same as the z16, z15 & z14 ZR1
  - Each data center requires at least one for all 19’’ systems
- **Fill and Drain Tool Is Not Required**
  - System and FRUs are shipped filled with coolant

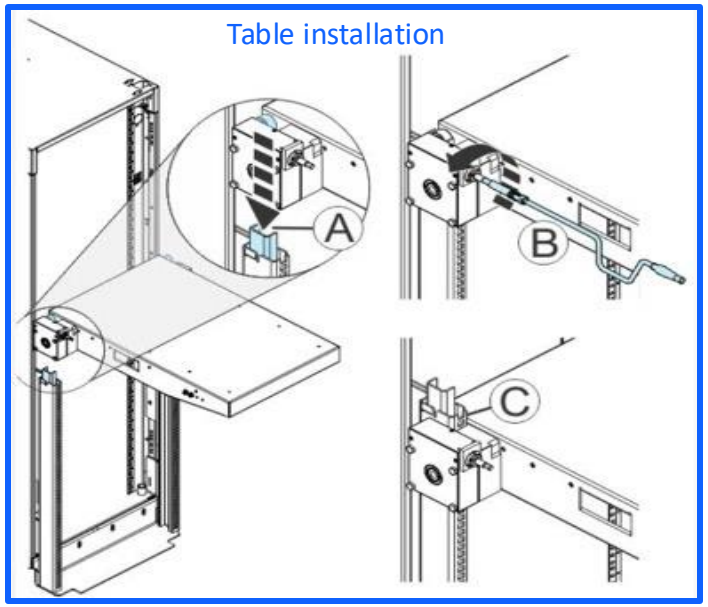

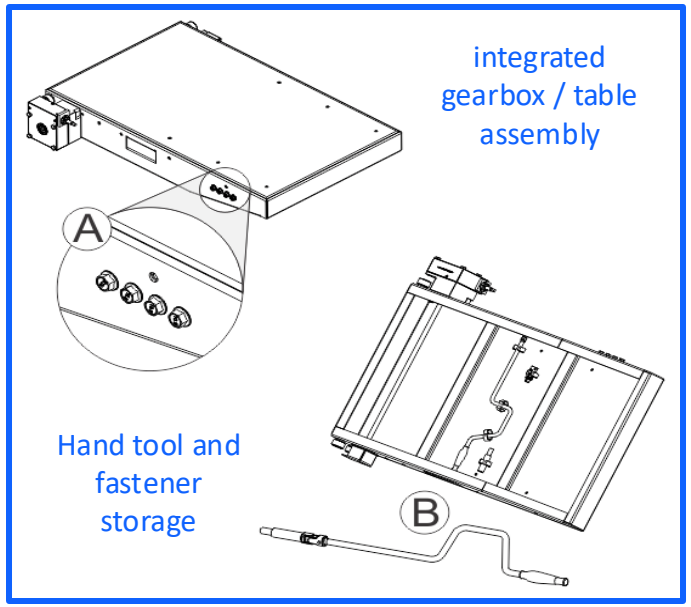

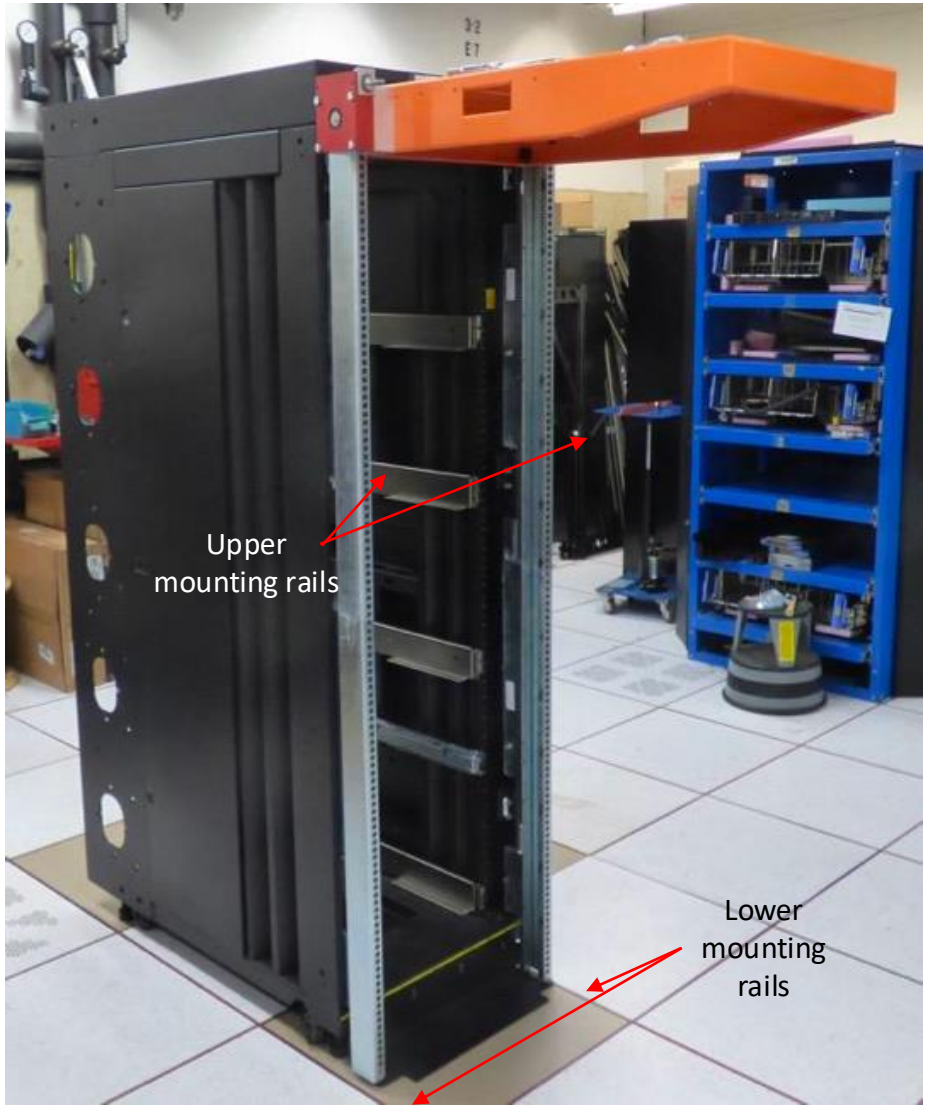

© Copyright 2025 IBM Corporation

© Copyright 2025 IBM Corporation